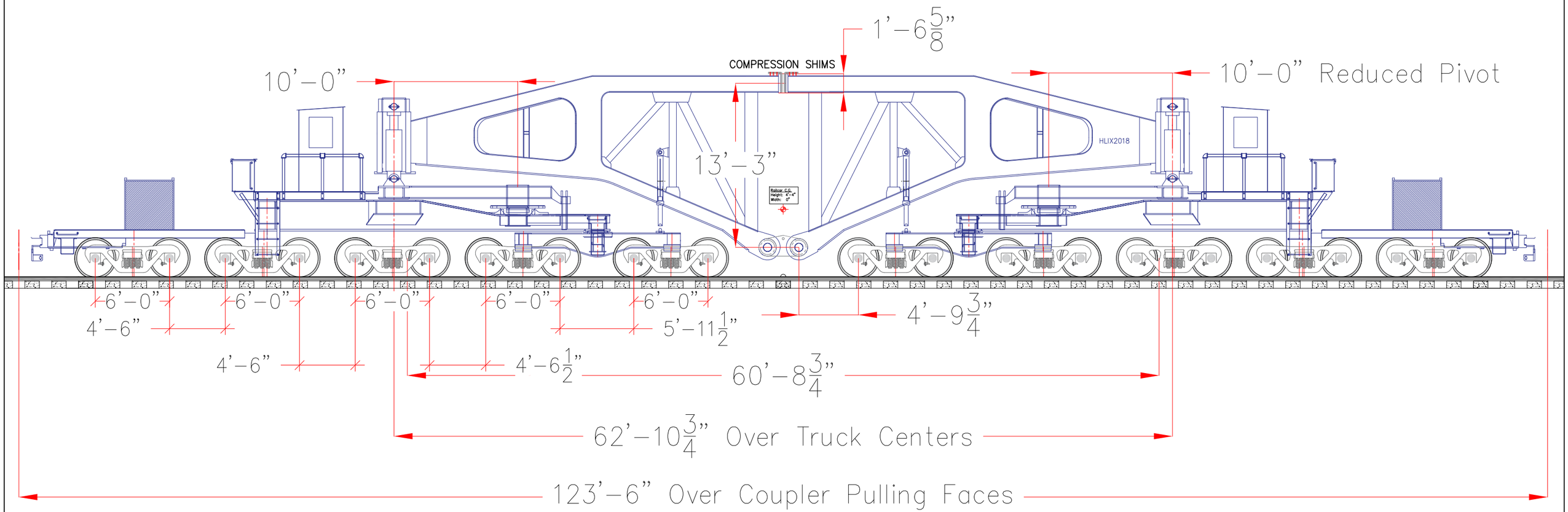

RAIL CAR DATA	
Rail Car Model:	HLIX2018
# Axles:	20
Overall Length:	166' - 9 5/8"
Truck Centers:	110' - 10 3/8"
Gross Rail Load:	1,430,000 lbs
Light weight w/out deck:	401,650 lbs
Light weight w/deck:	533,400 lbs
Est. Cap. w/out deck:	1,028,350 lbs
Est. Cap. w/deck:	896,600 lbs
Est. Side Shift:	±14"
Est. Vertical Shift:	±12"

Info. Type	Ref. No.	Description	Revision	Date
This plan is based on the information as detailed above				

Rev.	Description	Drawn	Date	Appr.
0	Issued for use	ED	07.26.18	MS

HLI RAIL & RIGGING, LLC
8900 Eastloch Drive, Suite 215
Spring, TX 77389
Tel: 281-826-0009
Fax: 281-826-0094

© 2018 HLI Rail & Rigging, LLC. CONFIDENTIAL - No part of this document or any information contained herein may be reproduced or retransmitted in any form without the express written consent of HLI Rail & Rigging, LLC. All rights reserved.

CLIENT: -

Location: -

PROJECT: -

Original Size Letter | Scale: NTS | HLI: HLIX 2018

TITLE: General Arrangement
20 Axle Schnabel Rail Car
HLIX 2018 - Load Certificate

PROJ. No.: HLIX 2018 | Drawing No.: 2018-101-01 | REVISION: 0